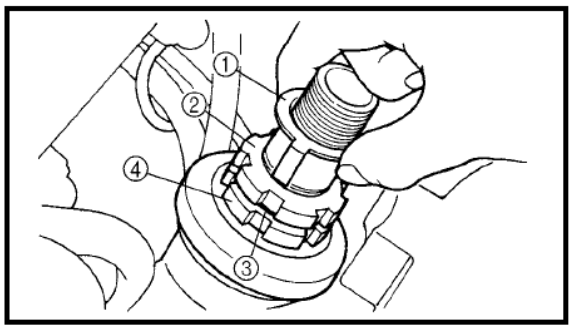

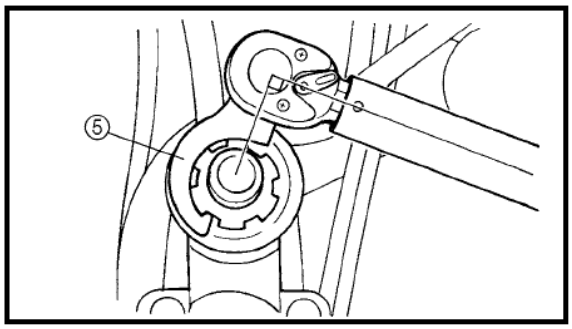

6. Adjust:
   - steering head

▼▼▼▼▼▼▼▼▼▼▼▼▼▼▼▼▼▼▼▼▼▼▼▼▼▼▼▼▼▼

a. Remove the lock washer ①, the upper ring nut ②, and the rubber washer ③.

b. Loosen the lower ring nut ④ and then tighten it to specification with a ring nut wrench ⑤.

NOTE:

Set the torque wrench at a right angle to the ring nut wrench.

	Ring nut wrench **YU-33975**
	Lower ring nut (initial tightening torque) **52 Nm (5.2 m • kg, 37 ft • lb)**

c. Loosen the lower ring nut completely, then tighten it to specification.

⚠ WARNING

Do not overtighten the lower ring nut.

	Lower ring nut (final tightening torque) **3 Nm (0.3 m • kg, 2.2 ft • lb)**

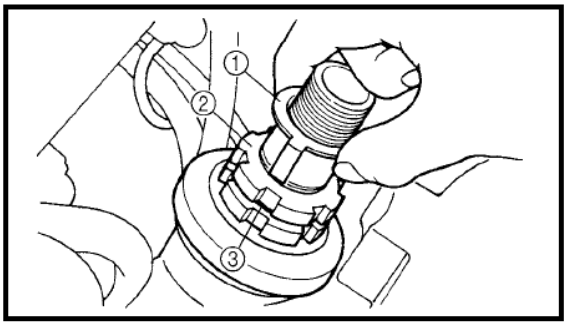

d. Check the steering head for looseness or binding by turning the front fork all the way in both directions. If any binding is felt, remove the lower bracket and check the upper and lower bearings.

   Refer to "STEERING HEAD" in chapter 4.

e. Install the rubber washer ③.

f. Install the upper ring nut ②.

g. Finger tighten the upper ring nut ②, then align the slots of both ring nuts. If necessary, hold the lower ring nut and tighten the upper ring nut until their slots are aligned.

h. Install the lock washer ①.

NOTE:

Make sure the lock washer tabs sit correctly in the ring nut slots.